1. Front Body (Front Body, installation on the outside of the door)

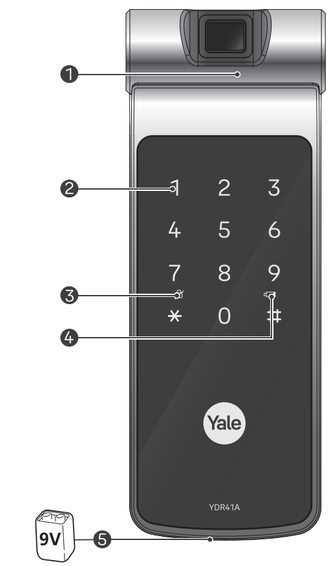

9V Emergency alkaline battery

2. Basic Contents

Basic Contents

Front Body

Main Body

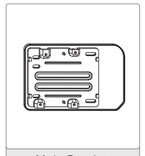

Main Bracket

Striker Plate

- User Manual
- Installation Guide
- AA Batteries X 4
- Screws

Optional Accessories

- Remote Controller
- Remote Control Module
- Bluetooth Module

3. Specifications

Parts		Specifications	Remarks
Front Body		64.6(W) X 160.5(H) X 20(D)mm Die-Casting	Operating temperature: -15~55°C (5~131°F)
Main Body		162.2(W) X 87(H) X 35(D)mm Die-Casting	
Type of Product		Direct current, Temperature Sensor, Not fire resistant, Key is not available, Deadbolt type door lock (D-NF-T-NK-S)	
Option	Remote Controller	Wireless	Optional
	Bluetooth Module	Wireless security system	Optional

※ Battery life may vary depending on temperature, moisture levels, frequency of use and the quality of battery used.
※ Please make sure that all parts are included when purchasing the product.
※ Optional products may not be available depending on your country or local dealer.

4. Main Body (Main Body, installation on the inside of the door)

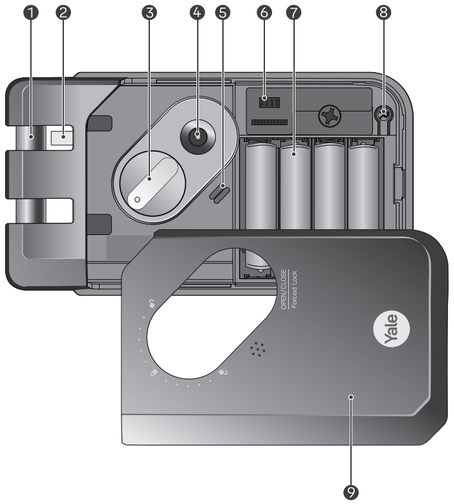

5. Front Body

1	Fingerprint Module
2	Keypad(10-key)
3	Dead Bolt Jam Lamp
4	Low Battery Indicator
5	Emergency Power Supply Terminal

6. Main Body

1	Dead Bolt
2	Automatic Locking Sensor
3	Thumb Turn Lock
4	Double Open/Close Button
5	Speaker
6	Module Accessory Slot (Optional)
7	1.5V AA Alkaline Batteries (4PCS)
8	Ⓡ Registration Button
9	Battery Cover

7. Setting Menu

Master Mode: Only a designated person who knows 'Master PIN Code' has authority to set features.

Normal Mode: If no user is assigned with master code without a designated person, anyone who knows 'User PIN Code' has authority to set features.

Visitor Code: Users with Visitor Code can only open the door with no access to change settings.

Onetime Code: The onetime code is used only once for unlocking the door lock and automatically deleted after usage.

User Slot Number: It should be 2 digits(like '01', '02'...'99', '00') and available in advanced mode.

	Touch the Keypad of the Front Body with your palm to begin
*	Press * button on the Keypad
#	Press # button on the Keypad
Ⓡ	Press Ⓡ (Registration) button in every steps to start or complete the session
F	Enter User Fingerprint (Up to 100 Users)
U PIN CODE	Enter User Code (4 ~ 10 digits)
M PIN CODE	Enter Master Code (4 ~ 10 digits)
V PIN CODE	Enter Visitor Code (Only 4 digits)
O PIN CODE	Enter Onetime Code (Only 4 digits)
UN	User Slot Number should be 2 digits (like '01'... '99' and '00': Location of 100th user slot must be assigned "00" instead of "100".)
	Rotation area to add more features

8. Product Features

One Touch Fingerprint Access
Secure one Touch Live fingerprint detection for personalized access. Unique Sensor not only provides high security but faster unlocking experience as well.

Yale Access App
Yale Access gives you the peace of mind of knowing who and what you love is safe - no matter where you are- just at the touch of your smartphone.

Smart Touchpad – Auto Lock
The door Locks when you touch the palm on the keypad.

3 minute Lock Out Feature
After five (5) unsuccessful attempts of an invalid code or fingerprint, lock out mode is activated for 3 minutes.

Smart Etiquette
When entering a pin code on the keypad, the user can open the door lock in silent mode.

Fake PIN Code
Security enhancement to enter any number before or after entering a password to prevent the PIN code from being exposed.

Internal Forced Lock
It is a security-enhancing function that 'disables' authentication methods such as passwords and fingerprints from outside when setting up functions indoors.

External Forced Lock
It is a security-enhancing function that an alarm goes off if someone opens door from inside when setting up functions outside.

Voice Guidance
It guides you through the operation status on how to enable various features & settings- mode for easier and more convenient use.

Other features and Benefits
- Remote Controller (Optional):
  This option may not be available depending on your country or local dealer.
- Network Module/Controller (Optional):
  It allows door lock to connect with Home network controller.
- Intrusion/Broken Alarm.
- Low Battery Alarm and Emergency Power Supply.

9. Normal Mode (Default Mode)

Normal mode is for convenient mode for anyone with user code to change various settings.

1 → 12 (Registration process) ✱ Continue / Ⓡ Complete

	1	2	3	4	5	6	7	8	9	10	11	12
User Code (Only 1 User)												
Registr-ation	Ⓡ	U PIN CODE New	Ⓡ									
Fingerprint (Up to 100 Users)												
Registr-ation	Ⓡ	*	F 8times	* OR	Ⓡ							
Visitor Code (Only 1 User)												
Registr-ation	U PIN CODE	Ⓡ	1	#	1	#	V PIN CODE	#	* OR	Ⓡ		
Delete					3	#	U PIN CODE	#	* OR	Ⓡ		
Onetime Code (Only 1 User, Automatically deleted after use)												
Registr-ation	U PIN CODE	Ⓡ	2	#	1	#	O PIN CODE	#	* OR	Ⓡ		
Delete					3	#	U PIN CODE	#	* OR	Ⓡ		
Delete all fingerprint credentials												
Delete	U PIN CODE	Ⓡ	3	#	U PIN CODE	#	* OR	Ⓡ				
Automatic Lock												
Enable	U PIN CODE	Ⓡ	4	#	2	#	1	#	* OR	Ⓡ		
Disable							3	#	* OR	Ⓡ		
Volume Control												
High							1	#	* OR	Ⓡ		
Low	U PIN CODE	Ⓡ	4	#	3	#	2	#	* OR	Ⓡ		
Mute							3	#	* OR	Ⓡ		

Double Open/Close Button Settings												
Enable	U PIN CODE	Ⓡ	4	#	4	#	1	#	* OR	Ⓡ		
Disable							3	#	* OR	Ⓡ		
Language Change												
Registr-ation	U PIN CODE	Ⓡ	4	#	5	#	1 Korean	#	* OR	Ⓡ		
							2 Chinese	#	* OR	Ⓡ		
							3 English	#	* OR	Ⓡ		
							4 Taiwanese	#	* OR	Ⓡ		
Bluetooth setting (Yale Access app)												
Registr-ation	U PIN CODE	Ⓡ	7	#	Set up a new device in the app							
Remote Controller (Only 5 Users)												
Registr-ation	U PIN CODE	Ⓡ	8	#	1	#	SET Button	#	* OR	Ⓡ		
Delete					3	#	U PIN CODE	#	* OR	Ⓡ		
Home Network Controller												
Registr-ation	U PIN CODE	Ⓡ	9	#	1	#	Cont roller	#	* OR	Ⓡ		
Delete					3	#	U PIN CODE	#	* OR	Ⓡ		

Remote Controller
Set with registration button located on the top of remote controller. You can press it using a pin like the one shown in the image.

Please note following when pairing lock with Yale Access App.

- Depending on product type or FW version, app registration and door lock connection in normal mode may not be possible, so if registration is not possible, change from normal mode to master mode and try again.
  [App Registration in Master Mode: Master Pin Code-> R (Registration Button)-> 7 -> #]
- Because Yale Access Bluetooth App is only available in master mode, user code automatically changes to master code when registering APP in normal mode.
- Please be informed that all registered credentials will be deleted when changing mode or registering and deleting app.

10. Unlocking Door with Finger print

Touch the panel of fingerprint area sensor using registered fingerprint for 1 second. → Fingerprint scan completed.

11. Unlocking Door with Code

Palm touch → Enter the Code → Palm touch OR Enter the * button

12. Unlocking Door with Smart Etiquette.

Palm touch for 3sec. → Enter the User PIN Code then touch the keypad with your palm OR Scan Fingerprint

13. Unlocking the door from inside

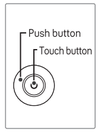

To unlock and open the door, when "double open/close button setting" are enabled.
Press the touch button and push button in the center of the double open/close button simultaneously.

To unlock and open the door, when "double open/close button setting" are disabled.
Pressing the push button unlocks the door and opens.

Opening the door with Thumb Turn Knob
The door will be open by turning the Thumb Turn Knob into opening direction.

14. Locking the door

Locking the door from outside/inside when the lock is set on [Automatic Lock] mode
5 sec — The door will be automatically locked within 5 seconds.

Locking the door from outside when the lock is set on [Manual Locking] mode
To lock the door lock, touch the Keypad with your palm.

Locking the door from inside when the lock is set to [Manual Locking] mode
The door will be locked by turning the Thumb Turn Knob into closing direction.
The door will be locked by pressing O/C button.

15. External Forced Lock

Enable External Forced Lock : Fingerprint

Scan with registered Fingerprint and hold the fingerprint area until you hear 3 beep sounds.

Enable External Forced Lock : User Code

Palm touch → Enter the User PIN Code → Enter the # button for 5 Sec.

Disable External Forced Lock

The external force lock function is automatically disabled when the door is opened with appropriate authentication from the outside.

16. Internal Forced Lock

Enable Internal Forced Lock

Pressing the O/C button indoors for five seconds will sound three times, activating the internal forced lock function.

Disable Internal Forced Lock

Pressing the button indoors for 5 seconds will sound three times and disable the internal forced lock function.

17. Alarm

Intrusion Alarm : The alarm goes off when someone forces the door open. For example, In case of an intrusion by opening a gap in the door while the door is locked.

Broken Alarm(Breakage Alarm) : The alarm goes off when the front part is completely separated from the main set. For example, forced removal of external product (front body).

To turn off Alarm

- Enter the registered User Code.
- Scan the registered fingerprint.
- Press and hold the O/C Button for 5seconds.

18. 3 Minute Lock Out

All access mode from the external side are disabled for 3 minutes to deter unauthorized access.

Disable 3-minute Lock Out

- Press the Open/Close button.
- Press Ⓡ button.

19. Unlocking Door with Fake Code

There is no limitation for digits of Fake Pin Code.

Palm touch → Enter the User Code and Fake Code OR Enter the Fake Code and User Code → Palm touch

20. Power supply

One-on-one real life size
1.5V(LR6) Alkaline AA Battery

It may sustain 1 year if used 10 times a day. (Users are advised to use authentic Alkaline batteries.)
* Kindly dispose used batteries.

You must replace all 4 batteries in the following cases:
* The Low Battery LED on keypad flickers red.
* When low battery notification message is played.

RISK OF EXPLOSION IF BATTERY IS REPLACED BY AN INCORRECT TYPE.
DISPOSE OF USED BATTERIES ACCORDING TO THE NATIONAL CODE OR RECYCLING PROGRAM.

21. Emergency power supply for discharged batteries

Contact 9V battery → Palm touch → Enter the User Code and Plam touch OR Scan fingerprint

22. Code Chart

Duplicate if necessary

PIN Code Management(Up to 100 Users.)		
User Type	User Name	PIN Code
Master		
User ___		
User ___		
User ___		
User ___		
User ___		
User ___		
User ___		
User ___		
User ___		
User ___		
User ___		
User ___		
User ___		
User ___		
User ___		
User ___		
User ___		
User ___		
User ___		
User ___		
User ___		
User ___		
User ___		

23. Master Mode

Master mode is a mode in which only the administrator can set the door lock and provide access to other users. 100 users passwords, 100 users fingerprint and individual registration and deletion of one-time passwords enable efficient management of visitors.

1 → 14 (Registration process) ✱ Continue / Ⓡ Complete

	1	2	3	4	5	6	7	8	9	10	11	12	13	14
Switch to master mode (from normal mode)														
Change Mode	U PIN CODE	Ⓡ	4	#	1	#	M PIN CODE New	#	M PIN CODE Again	Ⓡ				
Master Pin Code Change (Only 1 User)														
Registr-ation	M PIN CODE	Ⓡ	1	#	M PIN CODE New	#	M PIN CODE Again	#	✱ OR	Ⓡ				
User Code (Up to 100 Users)														
Registr-ation	M PIN CODE	Ⓡ	2	#	1	#	UN	#	U PIN CODE	#	✱ OR	Ⓡ		
Delete					3	#	UN	#	✱ OR	Ⓡ				
Fingerprint (Up to 100 Users)														
Registr-ation	M PIN CODE	Ⓡ	3	#	1	#	UN	#	8times	✱ OR	Ⓡ			
Delete					3	#	UN	#	✱ OR	Ⓡ				
Onetime Code (Only 1 User, Automatically deleted after use)														
Registr-ation	M PIN CODE	Ⓡ	4	#	1	#	0 PIN CODE	#	✱ OR	Ⓡ				
Delete					3	#	M PIN CODE	#	✱ OR	Ⓡ				
Delete all credentials														
Delete	M PIN CODE	Ⓡ	5	#	M PIN CODE	#	✱ OR	Ⓡ						
Automatic Lock														
Enable	M PIN CODE	Ⓡ	6	#	2	#	1	#	✱ OR	Ⓡ				
Disable							3	#	✱ OR	Ⓡ				

※ UN User Slot Number should be 2 digits. like '01' .. '99' and '00': Location of 100th user slot must be assigned "00" instead of "100".

Volume Control														
High							1	#	✱ OR	Ⓡ				
Low	M PIN CODE	Ⓡ	6	#	3	#	2	#	✱ OR	Ⓡ				
Mute							3	#	✱ OR	Ⓡ				
Double Open/Close Button Settings														
Setting	M PIN CODE	Ⓡ	6	#	4	#	1	#	✱ OR	Ⓡ				
Release							3	#	✱ OR	Ⓡ				
Language Change														
Registr-ation	M PIN CODE	Ⓡ	6	#	5	#	1 Korean	#	✱ OR	Ⓡ				
							2 Chinese	#	✱ OR	Ⓡ				
							3 English	#	✱ OR	Ⓡ				
							4 Taiwanese	#	✱ OR	Ⓡ				
Bluetooth Setting (Yale Access App)														
Registr-ation	M PIN CODE	Ⓡ	7	#	Set up a new device in the app									
Remote Controller (Up to 5 Users)														
Registr-ation	M PIN CODE	Ⓡ	8	#	1	#	UN	#	SET Button	#	✱ OR	Ⓡ		
Delete					3	#	UN	#	✱ OR	Ⓡ				
Home Network Controller														
Registr-ation	M PIN CODE	Ⓡ	9	#	1	#	Cont roller	#	✱ OR	Ⓡ				
Delete					3	#	M PIN CODE	#	✱ OR	Ⓡ				
Switch to normal mode (from master mode)														
Change Mode	M PIN CODE	Ⓡ	6	#	1	#	U PIN CODE New	#	U PIN CODE Again	Ⓡ				

※ Voice guidance :Voice guidance features assist in easy navigation through various features.
※ All registered passwords and other credentials will be deleted when mode is changed.
※ Please install(register) the network module when you want to use a remote control or home network.

24. Important notes

Do not install the digital door lock in an outdoor environment.

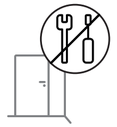

Do not attempt to disassemble the digital door lock by yourself.

Do not spray water directly or wipe with chemicals such as benzene, gasoline or alcohol.

Do not use force with a tool onto the product.

When using, remember that someone else can see the password.

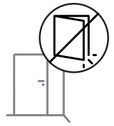

Make sure the door is closed properly when going out.

25. Safety and Warning

- Do not install the digital door lock in an outdoor environment.
- Do not attempt to disassemble the digital door lock by your self. By doing so, you may get an electronic shock and damage the product.
- Do not use force with a tool onto the product.
- Make sure to lock the door tight when you go out.
- Do not use water and any type of solvent to clean the product such as gasoline or benzene as they can cause damage to electronic circuit, deterioration and or paint peel-off.
- It is recommended to change User Code on a regular basis.
- In manual lock mode, make sure to double check whether the door is securely locked.
- When External Forced lock is set and unlock the door, the alarm will be activated.
- Do not use rechargeable batteries. Only alkaline batteries are recommended.
- Make sure to follow the above instructions to avoid any injuries.
- It cannot be guaranteed in a special conditions & environment such as water condensation, seaside.
- Warranty will not cover- exposure to dampness, excessive heat, excessive humidity and other extreme environmental conditions, corrosion, damage beyond repair, rusting, unauthorised modifications, unauthorised repairs, neglect, accident, alteration, acts of God, spillage of liquid or food particles.

Yale

User Guide

YDR41A

Fingerprint / PIN Code

Part of ASSA ABLOY

PLEASE READ INSTRUCTIONS BEFORE USE.
The functions and design of this product can be changed without prior notice for performance and quality improvement.

Packaging of this product can be recycled.

WEEE Note:
Waste electrical products should not be disposed of with household waste. Please recycle where facilities exist. Check your local authority or retailer for recycling advice.

CE

ISL-1857-00-018